Simulation results

Waveform

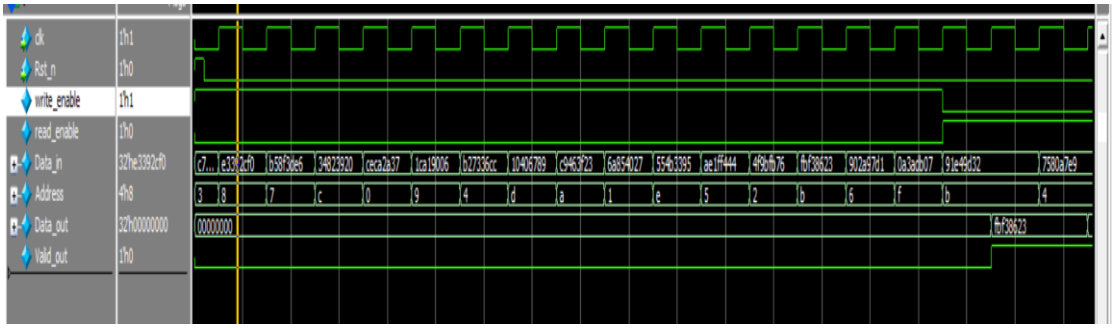

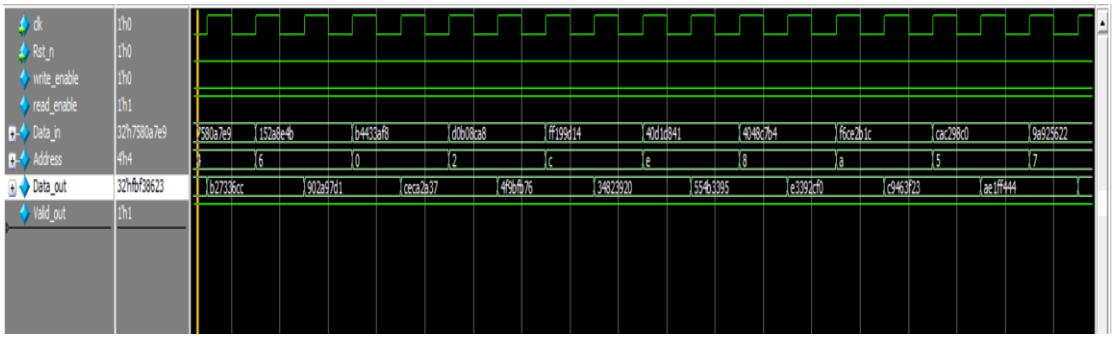

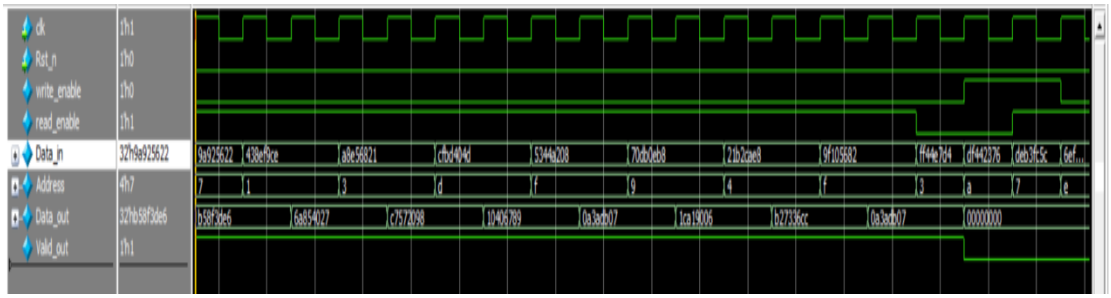

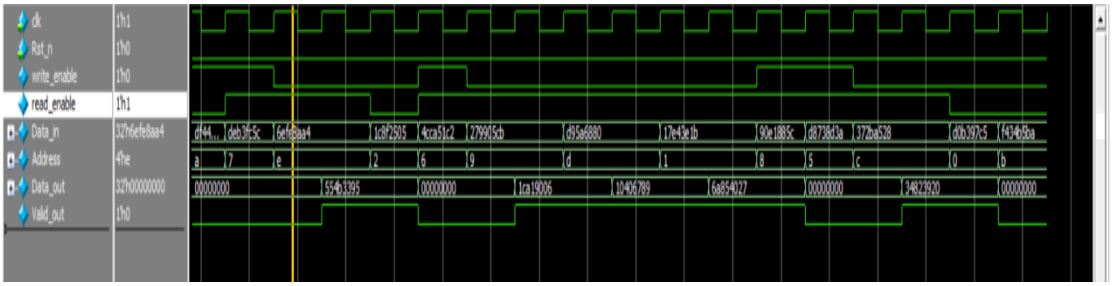

Transcript :

```
# UVM-1.1d
#(C) 2007-2013 Mentor Graphics Corporation
#(C) 2007-2013 Cadence Design Systems, Inc.
 #(C) 2006-2013 Synopsys, Inc.
 #(C) 2011-2013 Cypress Semiconductor Corp.
----------------------------------------------------------------#
 #
      ***********   #IMPORTANT RELEASE NOTES************
 #
   #You are using a version of the UVM library that has been compiled
   #with `UVM_NO_DEPRECATED undefined.
   #See http://www.eda.org/svdb/view.php?id=3313 for more details.
 #
   #You are using a version of the UVM library that has been compiled
   #with `UVM_OBJECT_MUST_HAVE_CONSTRUCTOR undefined.
   #See http://www.eda.org/svdb/view.php?id=3770 for more details.
 #
   #(Specify +UVM_NO_RELNOTES to turn off this notice)
 #
 #UVM_INFO verilog_src/questa_uvm_pkg-1.2/src/questa_uvm_pkg.sv(277) @ 0: reporter [Questa UVM] QUESTA_UVM-1.2.3
 #UVM_INFO verilog_src/questa_uvm_pkg-1.2/src/questa_uvm_pkg.sv(278) @ 0: reporter [Questa UVM]  questa_uvm::init(all(
 #UVM_INFO @ 0: reporter [RNTST] Running test my_test...
 #SCOREBOARD: Build Phase...
 #DRIVER: Connect Phase...
 #MONITOR: Connect Phase...
```

```
#AGENT: Connect Phase...

#SCOREBOARD: Connect Phase...

#ENVIROMENT: Connect Phase...

#TEST: Connect Phase...

************************************************************************** #

* #Questa UVM Transaction Recording Turned ON*                          .

* #recording_detail has been set*                                       .

 * #To turn off, set 'recording_detail' to off*                          :

* #uvm_config_db#(int)          ::set(null, "", "recording_detail", 0* ؛(

* #uvm_config_db#(uvm_bitstream_t)::set(null, "", "recording_detail", 0* ؛(

************************************************************************** #

#MONITOR: Run Phase...

#DRIVER: Run Phase...

#T = 0 [Driver]   Address = 3       Wr_En = 1         Data_in = c7572098       Rd_En = 0
Data_out = 0

---------------------------------------------------------- #

#T = 5 [Monitor]           Address = 3       Wr_En = 1         Data_in = c7572098       Rd_En = 0
           Data_out = 0     valid_out = 0

---------------------------------------------------------- #

#T=5 [SCOREBOARD][WRITE] STORE: addr=0x3 data=0xc7572098

#Subscriber received: Data_in: c7572098, Address: 0011

#Subscriber received: Data_out: 0, Valid_out: 0

#T = 5 [Driver]   Address = 8       Wr_En = 1         Data_in = e3392cf0       Rd_En = 0
Data_out = 0

---------------------------------------------------------- #

#T = 15 [Monitor]          Address = 8       Wr_En = 1         Data_in = e3392cf0       Rd_En = 0
           Data_out = 0     valid_out = 0

---------------------------------------------------------- #

#T=15 [SCOREBOARD][WRITE] STORE: addr=0x8 data=0xe3392cf0
```

#Subscriber received: Data_in: e3392cf0, Address: 1000

#Subscriber received: Data_out: 0, Valid_out: 0

#T = 15 [Driver] Address = 7 Wr_En = 1 Data_in = b58f3de6 Rd_En = 0 Data_out = 0

---------- #

#T = 25 [Monitor] Address = 7 Wr_En = 1 Data_in = b58f3de6 Rd_En = 0 Data_out = 0 valid_out = 0

---------- #

#T=25 [SCOREBOARD][WRITE] STORE: addr=0x7 data=0xb58f3de6

#Subscriber received: Data_in: b58f3de6, Address: 0111

#Subscriber received: Data_out: 0, Valid_out: 0

#T = 25 [Driver] Address = 12 Wr_En = 1 Data_in = 34823920 Rd_En = 0 Data_out = 0

---------- #

#T = 35 [Monitor] Address = 12 Wr_En = 1 Data_in = 34823920 Rd_En = 0 Data_out = 0 valid_out = 0

---------- #

#T=35 [SCOREBOARD][WRITE] STORE: addr=0xc data=0x34823920

#Subscriber received: Data_in: 34823920, Address: 1100

#Subscriber received: Data_out: 0, Valid_out: 0

#T = 35 [Driver] Address = 0 Wr_En = 1 Data_in = ceca2a37 Rd_En = 0 Data_out = 0

---------- #

#T = 45 [Monitor] Address = 0 Wr_En = 1 Data_in = ceca2a37 Rd_En = 0 Data_out = 0 valid_out = 0

---------- #

#T=45 [SCOREBOARD][WRITE] STORE: addr=0x0 data=0xceca2a37

#Subscriber received: Data_in: ceca2a37, Address: 0000

#Subscriber received: Data_out: 0, Valid_out: 0

#T = 45 [Driver] Address = 9 Wr_En = 1 Data_in = 1ca19006 Rd_En = 0
Data_out = 0

---------- #

#T = 55 [Monitor] Address = 9 Wr_En = 1 Data_in = 1ca19006 Rd_En = 0
Data_out = 0 valid_out = 0

---------- #

#T=55 [SCOREBOARD][WRITE] STORE: addr=0x9 data=0x1ca19006

#Subscriber received: Data_in: 1ca19006, Address: 1001

#Subscriber received: Data_out: 0, Valid_out: 0

#T = 55 [Driver] Address = 4 Wr_En = 1 Data_in = b27336cc Rd_En = 0
Data_out = 0

---------- #

#T = 65 [Monitor] Address = 4 Wr_En = 1 Data_in = b27336cc Rd_En = 0
Data_out = 0 valid_out = 0

---------- #

#T=65 [SCOREBOARD][WRITE] STORE: addr=0x4 data=0xb27336cc

#Subscriber received: Data_in: b27336cc, Address: 0100

#Subscriber received: Data_out: 0, Valid_out: 0

#T = 65 [Driver] Address = 13 Wr_En = 1 Data_in = 10406789 Rd_En = 0
Data_out = 0

---------- #

#T = 75 [Monitor] Address = 13 Wr_En = 1 Data_in = 10406789 Rd_En = 0
Data_out = 0 valid_out = 0

---------- #

#T=75 [SCOREBOARD][WRITE] STORE: addr=0xd data=0x10406789

#Subscriber received: Data_in: 10406789, Address: 1101

#Subscriber received: Data_out: 0, Valid_out: 0

#T = 75 [Driver] Address = 10 Wr_En = 1 Data_in = c9463f23 Rd_En = 0
Data_out = 0

---------- #

#T = 85 [Monitor] Address = 10 Wr_En = 1 Data_in = c9463f23 Rd_En = 0
Data_out = 0 valid_out = 0

---------- #

#T=85 [SCOREBOARD][WRITE] STORE: addr=0xa data=0xc9463f23

#Subscriber received: Data_in: c9463f23, Address: 1010

#Subscriber received: Data_out: 0, Valid_out: 0

#T = 85 [Driver] Address = 1 Wr_En = 1 Data_in = 6a854027 Rd_En = 0
Data_out = 0

---------- #

#T = 95 [Monitor] Address = 1 Wr_En = 1 Data_in = 6a854027 Rd_En = 0
Data_out = 0 valid_out = 0

---------- #

#T=95 [SCOREBOARD][WRITE] STORE: addr=0x1 data=0x6a854027

#Subscriber received: Data_in: 6a854027, Address: 0001

#Subscriber received: Data_out: 0, Valid_out: 0

#T = 95 [Driver] Address = 14 Wr_En = 1 Data_in = 554b3395 Rd_En = 0
Data_out = 0

---------- #

#T = 105 [Monitor] Address = 14 Wr_En = 1 Data_in = 554b3395 Rd_En = 0
Data_out = 0 valid_out = 0

---------- #

#T=105 [SCOREBOARD][WRITE] STORE: addr=0xe data=0x554b3395

#Subscriber received: Data_in: 554b3395, Address: 1110

#Subscriber received: Data_out: 0, Valid_out: 0

#T = 105 [Driver] Address = 5 Wr_En = 1 Data_in = ae1ff444 Rd_En = 0
Data_out = 0

---------- #

#T = 115 [Monitor] Address = 5 Wr_En = 1 Data_in = ae1ff444 Rd_En = 0
Data_out = 0 valid_out = 0

---------- #

#T=115 [SCOREBOARD][WRITE] STORE: addr=0x5 data=0xae1ff444

#Subscriber received: Data_in: ae1ff444, Address: 0101

#Subscriber received: Data_out: 0, Valid_out: 0

#T = 115 [Driver] Address = 2 Wr_En = 1 Data_in = 4f9bfb76 Rd_En = 0
Data_out = 0

---------- #

#T = 125 [Monitor] Address = 2 Wr_En = 1 Data_in = 4f9bfb76 Rd_En = 0
Data_out = 0 valid_out = 0

---------- #

#T=125 [SCOREBOARD][WRITE] STORE: addr=0x2 data=0x4f9bfb76

#Subscriber received: Data_in: 4f9bfb76, Address: 0010

#Subscriber received: Data_out: 0, Valid_out: 0

#T = 125 [Driver] Address = 11 Wr_En = 1 Data_in = fbf38623 Rd_En = 0
Data_out = 0

---------- #

#T = 135 [Monitor] Address = 11 Wr_En = 1 Data_in = fbf38623 Rd_En = 0
Data_out = 0 valid_out = 0

---------- #

#T=135 [SCOREBOARD][WRITE] STORE: addr=0xb data=0xfbf38623

#Subscriber received: Data_in: fbf38623, Address: 1011

#Subscriber received: Data_out: 0, Valid_out: 0

#T = 135 [Driver] Address = 6 Wr_En = 1 Data_in = 902a97d1 Rd_En = 0
Data_out = 0

---------- #

#T = 145 [Monitor] Address = 6 Wr_En = 1 Data_in = 902a97d1 Rd_En = 0
Data_out = 0 valid_out = 0

---------- #

#T=145 [SCOREBOARD][WRITE] STORE: addr=0x6 data=0x902a97d1

#Subscriber received: Data_in: 902a97d1, Address: 0110

#Subscriber received: Data_out: 0, Valid_out: 0

#T = 145 [Driver] Address = 15 Wr_En = 1 Data_in = a3adb07 Rd_En = 0
Data_out = 0

---------- #

#T = 155 [Monitor] Address = 15 Wr_En = 1 Data_in = a3adb07 Rd_En = 0
Data_out = 0 valid_out = 0

---------- #

#T=155 [SCOREBOARD][WRITE] STORE: addr=0xf data=0xa3adb07

#Subscriber received: Data_in: a3adb07, Address: 1111

#Subscriber received: Data_out: 0, Valid_out: 0

#T = 155 [Driver] Address = 11 Wr_En = 0 Data_in = 91e49d32 Rd_En = 1
Data_out = 0

---------- #

#T = 175 [Monitor] Address = 11 Wr_En = 0 Data_in = 91e49d32 Rd_En = 1
Data_out = fbf38623 valid_out = 1

---------- #

#T=175 [SCOREBOARD][READ] PASS addr=0xb exp=0xfbf38623 act=0xfbf38623

#Subscriber received: Data_in: 91e49d32, Address: 1011

#Subscriber received: Data_out: fbf38623, Valid_out: 1

#T = 175 [Driver] Address = 4 Wr_En = 0 Data_in = 7580a7e9 Rd_En = 1
Data_out = 0

---------- #

#T = 195 [Monitor] Address = 4 Wr_En = 0 Data_in = 7580a7e9 Rd_En = 1
Data_out = b27336cc valid_out = 1

---------- #

#T=195 [SCOREBOARD][READ] PASS addr=0x4 exp=0xb27336cc act=0xb27336cc

#Subscriber received: Data_in: 7580a7e9, Address: 0100

#Subscriber received: Data_out: b27336cc, Valid_out: 1

#T = 195 [Driver] Address = 6 Wr_En = 0 Data_in = 152a8e4b Rd_En = 1
Data_out = 0

---------- #

#T = 215 [Monitor] Address = 6 Wr_En = 0 Data_in = 152a8e4b Rd_En = 1
Data_out = 902a97d1 valid_out = 1

---------- #

#T=215 [SCOREBOARD][READ] PASS addr=0x6 exp=0x902a97d1 act=0x902a97d1

#Subscriber received: Data_in: 152a8e4b, Address: 0110

#Subscriber received: Data_out: 902a97d1, Valid_out: 1

#T = 215 [Driver] Address = 0 Wr_En = 0 Data_in = b4433af8 Rd_En = 1
Data_out = 0

---------- #

#T = 235 [Monitor] Address = 0 Wr_En = 0 Data_in = b4433af8 Rd_En = 1
Data_out = ceca2a37 valid_out = 1

---------- #

#T=235 [SCOREBOARD][READ] PASS addr=0x0 exp=0xceca2a37 act=0xceca2a37

#Subscriber received: Data_in: b4433af8, Address: 0000

#Subscriber received: Data_out: ceca2a37, Valid_out: 1

#T = 235 [Driver] Address = 2 Wr_En = 0 Data_in = d0b08ca8 Rd_En = 1
Data_out = 0

---------- #

#T = 255 [Monitor] Address = 2 Wr_En = 0 Data_in = d0b08ca8 Rd_En = 1
Data_out = 4f9bfb76 valid_out = 1

---------- #

#T=255 [SCOREBOARD][READ] PASS addr=0x2 exp=0x4f9bfb76 act=0x4f9bfb76

#Subscriber received: Data_in: d0b08ca8, Address: 0010

#Subscriber received: Data_out: 4f9bfb76, Valid_out: 1

#T = 255 [Driver] Address = 12 Wr_En = 0 Data_in = ff199d14 Rd_En = 1
Data_out = 0

---------- #

#T = 275 [Monitor] Address = 12 Wr_En = 0 Data_in = ff199d14 Rd_En = 1
Data_out = 34823920 valid_out = 1

---------- #

#T=275 [SCOREBOARD][READ] PASS addr=0xc exp=0x34823920 act=0x34823920

#Subscriber received: Data_in: ff199d14, Address: 1100

#Subscriber received: Data_out: 34823920, Valid_out: 1

#T = 275 [Driver] Address = 14 Wr_En = 0 Data_in = 40d1d841 Rd_En = 1
Data_out = 0

---------- #

#T = 295 [Monitor] Address = 14 Wr_En = 0 Data_in = 40d1d841 Rd_En = 1
Data_out = 554b3395 valid_out = 1

---------- #

#T=295 [SCOREBOARD][READ] PASS addr=0xe exp=0x554b3395 act=0x554b3395

#Subscriber received: Data_in: 40d1d841, Address: 1110

#Subscriber received: Data_out: 554b3395, Valid_out: 1

#T = 295 [Driver] Address = 8 Wr_En = 0 Data_in = 4048c7b4 Rd_En = 1
Data_out = 0

---------- #

#T = 315 [Monitor] Address = 8 Wr_En = 0 Data_in = 4048c7b4 Rd_En = 1
Data_out = e3392cf0 valid_out = 1

---------- #

#T=315 [SCOREBOARD][READ] PASS addr=0x8 exp=0xe3392cf0 act=0xe3392cf0

#Subscriber received: Data_in: 4048c7b4, Address: 1000

#Subscriber received: Data_out: e3392cf0, Valid_out: 1

#T = 315 [Driver] Address = 10 Wr_En = 0 Data_in = f6ce2b1c Rd_En = 1
Data_out = 0

---------- #

#T = 335 [Monitor] Address = 10 Wr_En = 0 Data_in = f6ce2b1c Rd_En = 1
Data_out = c9463f23 valid_out = 1

---------- #

#T=335 [SCOREBOARD][READ] PASS addr=0xa exp=0xc9463f23 act=0xc9463f23

#Subscriber received: Data_in: f6ce2b1c, Address: 1010

#Subscriber received: Data_out: c9463f23, Valid_out: 1

#T = 335 [Driver] Address = 5 Wr_En = 0 Data_in = cac298c0 Rd_En = 1
Data_out = 0

---------- #

#T = 355 [Monitor] Address = 5 Wr_En = 0 Data_in = cac298c0 Rd_En = 1
Data_out = ae1ff444 valid_out = 1

---------- #

#T=355 [SCOREBOARD][READ] PASS addr=0x5 exp=0xae1ff444 act=0xae1ff444

#Subscriber received: Data_in: cac298c0, Address: 0101

#Subscriber received: Data_out: ae1ff444, Valid_out: 1

#T = 355 [Driver] Address = 7 Wr_En = 0 Data_in = 9a925622 Rd_En = 1
Data_out = 0

---------- #

#T = 375 [Monitor] Address = 7 Wr_En = 0 Data_in = 9a925622 Rd_En = 1
Data_out = b58f3de6 valid_out = 1

---------- #

#T=375 [SCOREBOARD][READ] PASS addr=0x7 exp=0xb58f3de6 act=0xb58f3de6

#Subscriber received: Data_in: 9a925622, Address: 0111

#Subscriber received: Data_out: b58f3de6, Valid_out: 1

#T = 375 [Driver] Address = 1 Wr_En = 0 Data_in = 438ef9ce Rd_En = 1
Data_out = 0

---------- #

#T = 395 [Monitor] Address = 1 Wr_En = 0 Data_in = 438ef9ce Rd_En = 1
Data_out = 6a854027 valid_out = 1

---------- #

#T=395 [SCOREBOARD][READ] PASS addr=0x1 exp=0x6a854027 act=0x6a854027

#Subscriber received: Data_in: 438ef9ce, Address: 0001

#Subscriber received: Data_out: 6a854027, Valid_out: 1

#T = 395 [Driver] Address = 3 Wr_En = 0 Data_in = a8e56821 Rd_En = 1
Data_out = 0

---------- #

#T = 415 [Monitor] Address = 3 Wr_En = 0 Data_in = a8e56821 Rd_En = 1
Data_out = c7572098 valid_out = 1

---------- #

#T=415 [SCOREBOARD][READ] PASS addr=0x3 exp=0xc7572098 act=0xc7572098

#Subscriber received: Data_in: a8e56821, Address: 0011

#Subscriber received: Data_out: c7572098, Valid_out: 1

#T = 415 [Driver] Address = 13 Wr_En = 0 Data_in = cfbd404d Rd_En = 1
Data_out = 0

---------- #

#T = 435 [Monitor] Address = 13 Wr_En = 0 Data_in = cfbd404d Rd_En = 1
Data_out = 10406789 valid_out = 1

---------- #

#T=435 [SCOREBOARD][READ] PASS addr=0xd exp=0x10406789 act=0x10406789

#Subscriber received: Data_in: cfbd404d, Address: 1101

#Subscriber received: Data_out: 10406789, Valid_out: 1

#T = 435 [Driver] Address = 15 Wr_En = 0 Data_in = 5344a208 Rd_En = 1
Data_out = 0

---------- #

#T = 455 [Monitor] Address = 15 Wr_En = 0 Data_in = 5344a208 Rd_En = 1
Data_out = a3adb07 valid_out = 1

---------- #

#T=455 [SCOREBOARD][READ] PASS addr=0xf exp=0xa3adb07 act=0xa3adb07

#Subscriber received: Data_in: 5344a208, Address: 1111

#Subscriber received: Data_out: a3adb07, Valid_out: 1

#T = 455 [Driver] Address = 9 Wr_En = 0 Data_in = 70db0eb8 Rd_En = 1
Data_out = 0

---------- #

#T = 475 [Monitor] Address = 9 Wr_En = 0 Data_in = 70db0eb8 Rd_En = 1
Data_out = 1ca19006 valid_out = 1

---------- #

#T=475 [SCOREBOARD][READ] PASS addr=0x9 exp=0x1ca19006 act=0x1ca19006

#Subscriber received: Data_in: 70db0eb8, Address: 1001

#Subscriber received: Data_out: 1ca19006, Valid_out: 1

#T = 475 [Driver] Address = 4 Wr_En = 0 Data_in = 21b2cae8 Rd_En = 1
Data_out = 0

---------- #

#T = 495 [Monitor] Address = 4 Wr_En = 0 Data_in = 21b2cae8 Rd_En = 1
Data_out = b27336cc valid_out = 1

---------- #

#T=495 [SCOREBOARD][READ] PASS addr=0x4 exp=0xb27336cc act=0xb27336cc

#Subscriber received: Data_in: 21b2cae8, Address: 0100

#Subscriber received: Data_out: b27336cc, Valid_out: 1

#T = 495 [Driver] Address = 15 Wr_En = 0 Data_in = 9f105682 Rd_En = 1
Data_out = 0

---------- #

#T = 515 [Monitor] Address = 15 Wr_En = 0 Data_in = 9f105682 Rd_En = 1
Data_out = a3adb07 valid_out = 1

---------- #

#T=515 [SCOREBOARD][READ] PASS addr=0xf exp=0xa3adb07 act=0xa3adb07

#Subscriber received: Data_in: 9f105682, Address: 1111

#Subscriber received: Data_out: a3adb07, Valid_out: 1

#T = 515 [Driver] Address = 3 Wr_En = 0 Data_in = ff44e7d4 Rd_En = 0
Data_out = 0

---------- #

#T = 525 [Monitor] Address = 3 Wr_En = 0 Data_in = ff44e7d4 Rd_En = 0
Data_out = 0 valid_out = 0

---------- #

#Subscriber received: Data_in: ff44e7d4, Address: 0011

#Subscriber received: Data_out: 0, Valid_out: 0

#T = 525 [Driver] Address = 10 Wr_En = 1 Data_in = df442376 Rd_En = 0 Data_out = 0

---------- #

#T = 535 [Monitor] Address = 10 Wr_En = 1 Data_in = df442376 Rd_En = 0 Data_out = 0 valid_out = 0

---------- #

#T=535 [SCOREBOARD][WRITE] STORE: addr=0xa data=0xdf442376

#Subscriber received: Data_in: df442376, Address: 1010

#Subscriber received: Data_out: 0, Valid_out: 0

#T = 535 [Driver] Address = 7 Wr_En = 1 Data_in = deb3fc5c Rd_En = 1 Data_out = 0

---------- #

#T = 545 [Monitor] Address = 7 Wr_En = 1 Data_in = deb3fc5c Rd_En = 1 Data_out = 0 valid_out = 0

---------- #

#T=545 [SCOREBOARD][WRITE_READ] STORE: addr=0x7 data=0xdeb3fc5c

#T=545 [SCOREBOARD][WRITE_READ] PASS addr=0x7 exp_data=0 exp_valid=0 act_data=0x0 act_valid=0

#Subscriber received: Data_in: deb3fc5c, Address: 0111

#Subscriber received: Data_out: 0, Valid_out: 0

#T = 545 [Driver] Address = 14 Wr_En = 0 Data_in = 6efe8aa4 Rd_En = 1 Data_out = 0

---------- #

#T = 565 [Monitor] Address = 14 Wr_En = 0 Data_in = 6efe8aa4 Rd_En = 1 Data_out = 554b3395 valid_out = 1

---------- #

#T=565 [SCOREBOARD][READ] PASS addr=0xe exp=0x554b3395 act=0x554b3395

#Subscriber received: Data_in: 6efe8aa4, Address: 1110

#Subscriber received: Data_out: 554b3395, Valid_out: 1

#T = 565 [Driver] Address = 2 Wr_En = 0 Data_in = 1c8f2505 Rd_En = 0 Data_out = 0

---------- #

#T = 575 [Monitor] Address = 2 Wr_En = 0 Data_in = 1c8f2505 Rd_En = 0
Data_out = 0 valid_out = 0

---------- #

#Subscriber received: Data_in: 1c8f2505, Address: 0010

#Subscriber received: Data_out: 0, Valid_out: 0

#T = 575 [Driver] Address = 6 Wr_En = 1 Data_in = 4cca51c2 Rd_En = 1
Data_out = 0

---------- #

#T = 585 [Monitor] Address = 6 Wr_En = 1 Data_in = 4cca51c2 Rd_En = 1
Data_out = 0 valid_out = 0

---------- #

#T=585 [SCOREBOARD][WRITE_READ] STORE: addr=0x6 data=0x4cca51c2

#T=585 [SCOREBOARD][WRITE_READ] PASS addr=0x6 exp_data=0 exp_valid=0
act_data=0x0 act_valid=0

#Subscriber received: Data_in: 4cca51c2, Address: 0110

#Subscriber received: Data_out: 0, Valid_out: 0

#T = 585 [Driver] Address = 9 Wr_En = 0 Data_in = 279905cb Rd_En = 1
Data_out = 0

---------- #

#T = 605 [Monitor] Address = 9 Wr_En = 0 Data_in = 279905cb Rd_En = 1
Data_out = 1ca19006 valid_out = 1

---------- #

#T=605 [SCOREBOARD][READ] PASS addr=0x9 exp=0x1ca19006 act=0x1ca19006

#Subscriber received: Data_in: 279905cb, Address: 1001

#Subscriber received: Data_out: 1ca19006, Valid_out: 1

#T = 605 [Driver] Address = 13 Wr_En = 0 Data_in = d95a6880 Rd_En = 1
Data_out = 0

---------- #

#T = 625 [Monitor] Address = 13 Wr_En = 0 Data_in = d95a6880 Rd_En = 1
Data_out = 10406789 valid_out = 1

---------- #

#T=625 [SCOREBOARD][READ] PASS addr=0xd exp=0x10406789 act=0x10406789

#Subscriber received: Data_in: d95a6880, Address: 1101

#Subscriber received: Data_out: 10406789, Valid_out: 1

#T = 625 [Driver] Address = 1 Wr_En = 0 Data_in = 17e43e1b Rd_En = 1 Data_out = 0

---------- #

#T = 645 [Monitor] Address = 1 Wr_En = 0 Data_in = 17e43e1b Rd_En = 1 Data_out = 6a854027 valid_out = 1

---------- #

#T=645 [SCOREBOARD][READ] PASS addr=0x1 exp=0x6a854027 act=0x6a854027

#Subscriber received: Data_in: 17e43e1b, Address: 0001

#Subscriber received: Data_out: 6a854027, Valid_out: 1

#T = 645 [Driver] Address = 8 Wr_En = 1 Data_in = 90e1885c Rd_En = 1 Data_out = 0

---------- #

#T = 655 [Monitor] Address = 8 Wr_En = 1 Data_in = 90e1885c Rd_En = 1 Data_out = 0 valid_out = 0

---------- #

#T=655 [SCOREBOARD][WRITE_READ] STORE: addr=0x8 data=0x90e1885c

#T=655 [SCOREBOARD][WRITE_READ] PASS addr=0x8 exp_data=0 exp_valid=0 act_data=0x0 act_valid=0

#Subscriber received: Data_in: 90e1885c, Address: 1000

#Subscriber received: Data_out: 0, Valid_out: 0

#T = 655 [Driver] Address = 5 Wr_En = 1 Data_in = d8738d3a Rd_En = 1 Data_out = 0

---------- #

#T = 665 [Monitor] Address = 5 Wr_En = 1 Data_in = d8738d3a Rd_En = 1 Data_out = 0 valid_out = 0

---------- #

#T=665 [SCOREBOARD][WRITE_READ] STORE: addr=0x5 data=0xd8738d3a

#T=665 [SCOREBOARD][WRITE_READ] PASS addr=0x5 exp_data=0 exp_valid=0 act_data=0x0 act_valid=0

#Subscriber received: Data_in: d8738d3a, Address: 0101

#Subscriber received: Data_out: 0, Valid_out: 0

#T = 665 [Driver] Address = 12 Wr_En = 0 Data_in = 372ba528 Rd_En = 1 Data_out = 0

---------- #

#T = 685 [Monitor] Address = 12 Wr_En = 0 Data_in = 372ba528 Rd_En = 1 Data_out = 34823920 valid_out = 1

---------- #

#T=685 [SCOREBOARD][READ] PASS addr=0xc exp=0x34823920 act=0x34823920

#Subscriber received: Data_in: 372ba528, Address: 1100

#Subscriber received: Data_out: 34823920, Valid_out: 1

#T = 685 [Driver] Address = 0 Wr_En = 0 Data_in = d0b397c5 Rd_En = 0 Data_out = 0

---------- #

#T = 695 [Monitor] Address = 0 Wr_En = 0 Data_in = d0b397c5 Rd_En = 0 Data_out = 0 valid_out = 0

---------- #

#Subscriber received: Data_in: d0b397c5, Address: 0000

#Subscriber received: Data_out: 0, Valid_out: 0

#T = 695 [Driver] Address = 11 Wr_En = 0 Data_in = f434b5ba Rd_En = 0 Data_out = 0

---------- #

#T = 705 [Monitor] Address = 11 Wr_En = 0 Data_in = f434b5ba Rd_En = 0 Data_out = 0 valid_out = 0

---------- #

#Subscriber received: Data_in: f434b5ba, Address: 1011

#Subscriber received: Data_out: 0, Valid_out: 0

```
#TEST: Run Phase...

#UVM_INFO verilog_src/uvm-1.1d/src/base/uvm_objection.svh(1267) @ 705: reporter
[TEST_DONE] 'run' phase is ready to proceed to the 'extract' phase

#

--- #UVM Report Summary---

#

** #Report counts by severity

#UVM_INFO :    4

#UVM_WARNING :    0

#UVM_ERROR :    0

#UVM_FATAL :    0

** #Report counts by id

#[Questa UVM]     2

#[RNTST]     1

#[TEST_DONE]     1

** #Note: $finish    : C:/questasim64_2021.1/win64/../verilog_src/uvm-
1.1d/src/base/uvm_root.svh(430(

#    Time: 705 ns  Iteration: 61  Instance: /top
```